OctoStretch

Instruction guide

English
7EN160104-01
2009-07-07

Applies to the following models:

OctoStretch	Prod. No. 3156055
OctoStretch Balance	Prod. No. 3156056

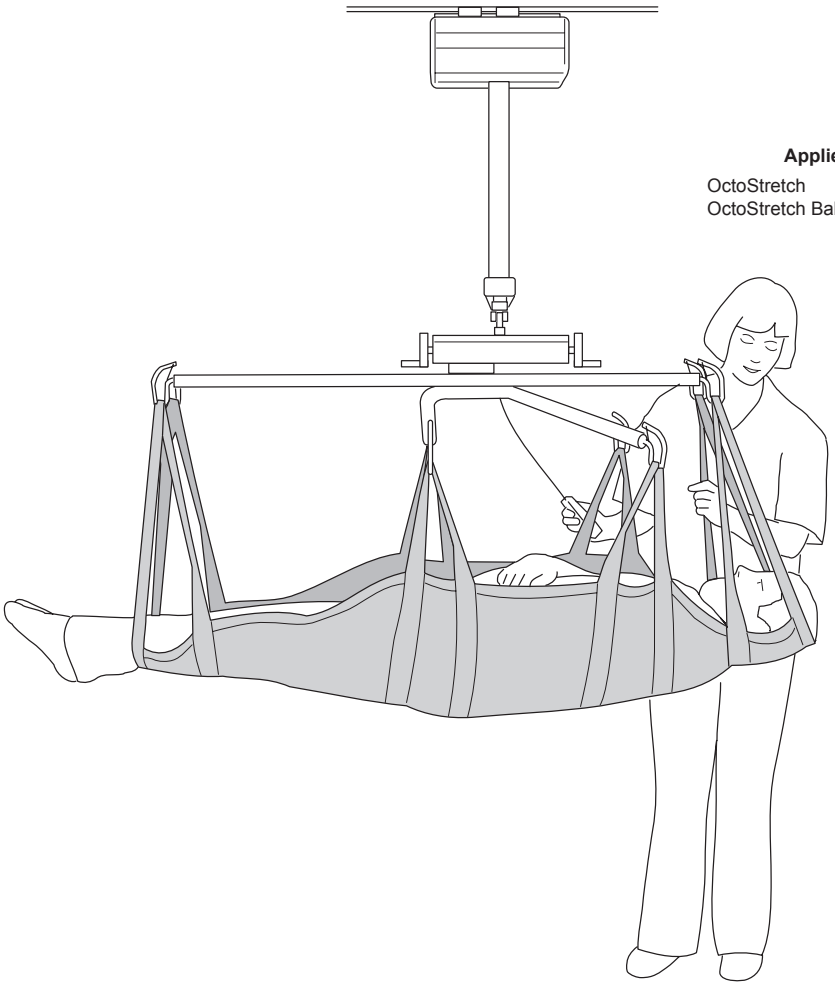

OctoStretch is intended for lifting and transferring patients in a horizontal position in cases where a particularly flat underlying lifting surface is not required. Common areas of use are in surgical wards, but even in intensive care wards and X-ray departments.

The body support part consists of either a full sheet or four to five lift straps.

OctoStretch is widely appreciated for its user-friendliness and the fact that it takes up relatively little space, both during use and storage.

A version of OctoStretch is also available with a balance attachment that facilitates regulation of the centre of gravity during lifting.

OctoStretch can be used in combination with several of Liko overhead lifts: Likorall, Multirall and Liko MasterLift. It is also recommended for use with Liko mobile lifts Viking and Golvo.

⚠ ”Caution!” triangles are used to warn of situations that demand extra care and attention.

In this document, the person being lifted is called the ”patient” and the person helping is called the ”assistant”.

CAUTION!
Read instructions for the lift and accessories carefully before use. Lifting and transferring a person always presents a potential risk. A thorough understanding of the contents of instruction guides is essential.
Only trained personnel should use the equipment.
If you have questions, please contact Liko or your local Liko representative.

Contents

Safety instructions 2
Definitions 3
Accessories 3
Assembly 4
Lifting with the full sheet 4-5
Application of the lift sheet with turning sheet 4
Application of the lift sheet with the help of slide sheets 5
Application of lift straps.....6
CrossStrap.....7
Lifting after application of sheet/straps 7
OctoStretch with Stretch Leveller 7

△**NOTE!** This instruction guide contains important information about the use of the product.
All personnel who use this product must be thoroughly familiar with the contents of this instruction guide.
Remember to keep the instructions where they are easily accessible for users of the product.

CE

OctoStretch complies with the requirements of directives for Class I medical-technical products.

Max. load: 200kg (440 lbs.)

Safety instructions

Before lifting with the stretcher, remember the following:

- We recommend that at least two people assist with the lift when using OctoStretch.
- Plan the lift carefully to ensure that it is performed as safely and conveniently as possible.
- Although Liko slingbars are equipped with safety latches, particular care should be taken.
  Before the patient is lifted from the underlying surface, but after the straps have been fully extended, make sure the straps are properly hooked to the stretcher.
- Never leave a patient unattended during a lifting situation.
- Make sure the wheels on the bed, gurney, etc. are locked during the lifting/transfer operation.
  In most cases, mobile lift wheels should not be locked.

Definitions

3156055	OctoStretch	pc.	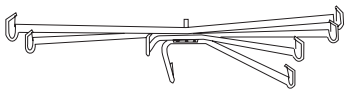
3156056	OctoStretch Balance	pc.	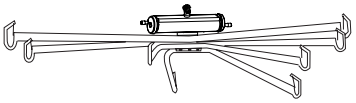
3683105 3683106 3683405 3683406	LiftSheet Octo, nylon, medium LiftSheet Octo, nylon, large LiftSheet Octo, plasticized mesh, medium LiftSheet Octo, plasticized mesh, large	pc. pc. pc. pc.	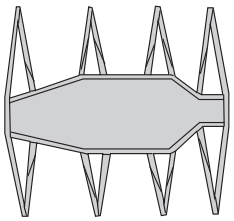
3683102 3683202 3683402	LiftStrap Octo, nylon LiftStrap Octo, cotton LiftStrap Octo, plasticized mesh	pc. pc. pc.	
3683112	LiftStrap Octo, reinforced (with pocket for plastic insert, but excl. plastic insert)	pc.	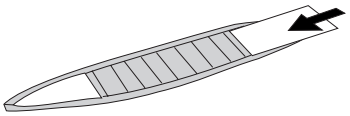
3683114	CrossStrap, reinforced (with pocket for plastic insert, but excl. plastic insert)	pc.	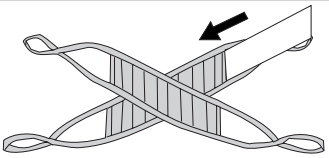
3683062	Plastic insert (for extra stiffness, fits 3683112, 3683114)	pc.	

LiftSheets and Straps are available upon request in other materials, contact Liko.

Accessories

Quick-release Hook TDM Art. No. 3156502
OctoStretch can be equipped with Quick-release Hook TDM for easy mounting on the lift without the need for tools.
Depending on which Liko lift is used, the lift is either equipped with, or can be equipped with, Liko Q-link connector or Adapter 13 (Viking).

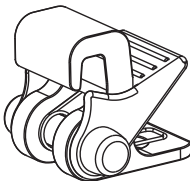

Quick-release Hook TDM
- 3156502

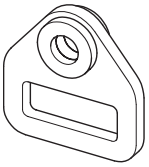

Adapter 13
- 3156506

Scales
Liko's product range includes scales that can be quickly and easily connected to the lift for weighing patients during lifting. The scale can be mounted with a Quick-release Hook TDM.
Contact your Liko representative for advice.

Assembly

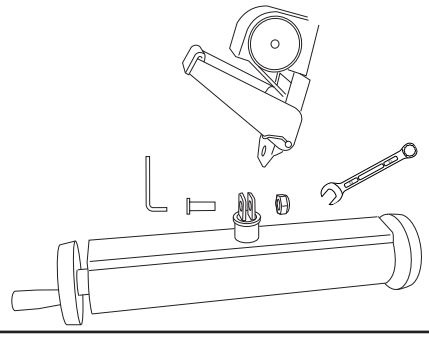

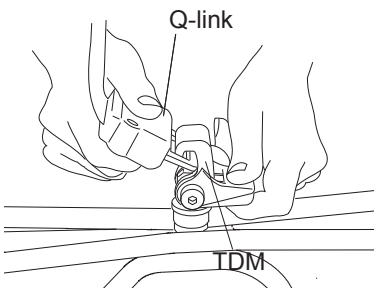

Fixed installation

OctoStretch is attached to the lift's so-called strap plate using an M10 x 25 screw and nut.

Use a 6mm Allan key and 17mm flat wrench/ spanner.
(Applies to Liko MasterLift, Likorall and Golvo.)

Mounting with Quick-release Hook

OctoStretch can be installed using Quick-release Hook TDM (Art. No. 3156502) for quick and easy installation, without the need for tools, on Multirall or other recommended Liko lifts that are equipped with Liko's Q-link connector or Adapter 13 (Viking).

Lifting with a full sheet

Naturally, when lifting with the full sheet, it is an advantage if the patient is mobile enough to be able to move onto the sheet unassisted. This is sometimes possible prior to surgery.
The operating table is prepared so that the lift sheet is placed under the surgical sheets, enabling the anaesthetized patient to be lifted after the operation.
Here, we present two alternative methods of applying the lift sheet under immobile patients: by turning the patient, and with the help of two sliding sheets.

Alt. 1) Application of the lift sheet with the help of a turning sheet

Turning a heavy patient on one side is a strenuous operation that is easier with the help of an aid such as a turning sheet. Two or more caregivers should perform this task.

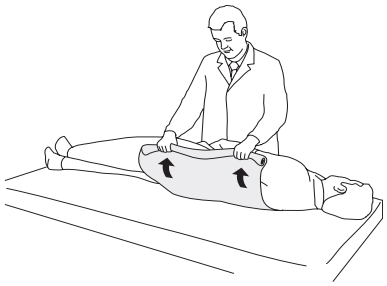

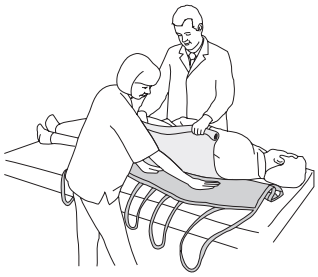

Turn the patient on one side by pulling the turning sheet towards you. ⚠ **Make sure the patient has enough room on the bed to prevent any risk of falling off.** You may need to raise the side rails on the bed, if available.

Position the lift sheet in under the patient as far as possible. The label should be at the head end and face down. Bunch more of the sheet together in folds so that the patient is lying on the centre of the sheet when he/she is turned onto his/her back.

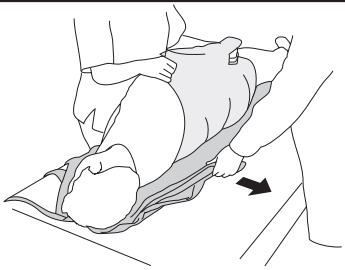

Turn the patient slightly in the opposite direction, so that the lift sheet can be smoothed out.
At the same time, prepare to remove the turning sheet, if neccessary, by folding it in under the patient before he/she is turned onto his/her back.

Turn the patient carefully, so that the turning sheet can be removed, if required.
Lay the patient gently on his/her back.
The patient shall now be positioned on the middle of the lift sheet, with support for the head.

Alt. 2) Application of the lift sheet with the help of two sliding sheets

If the lift sheet is to be placed under a patient that cannot be turned on one side, sliding sheets can be used. With the patient lying on his/her back, two folded sliding sheets are pulled into position under the patient and the lift sheet is pulled into place between the sliding sheets. Two or more caregivers should perform this task.

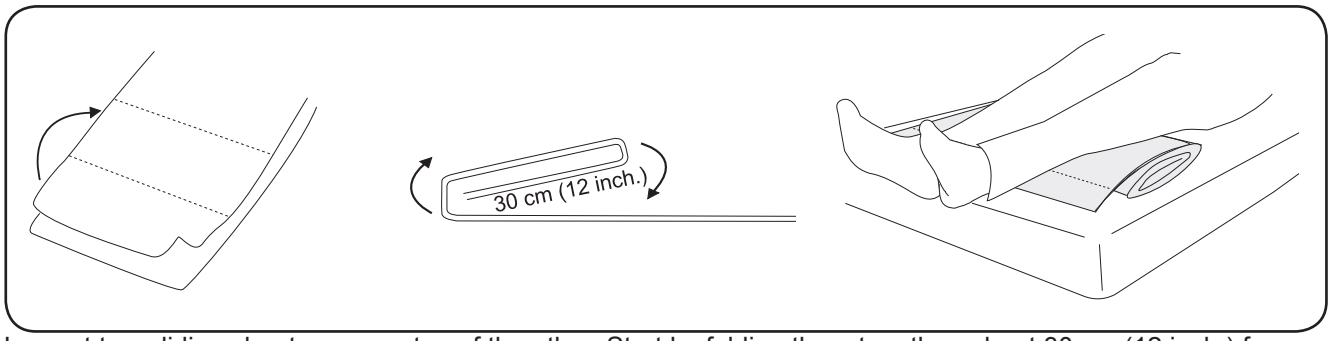

Lay out two sliding sheets, one on top of the other. Start by folding them together, about 30 cm (12 inch.) from the lower edge. Repeat this procedure, folding 30 cm (12 inch.) at a time until the entire length of the two sheets is folded. Turn the sheets so that the in-folds are facing the mattress.
Place the folded sheets under the patient's feet and calves.

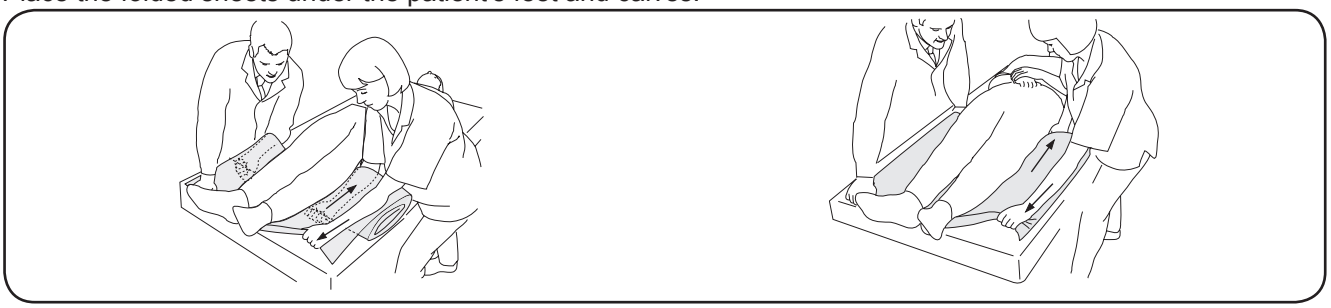

With their arms alongside the patient, the caregivers grasp the fold under the sliding sheets while holding the lower edge of the sheets in place with their other hands.

The caregivers then simultaneously unfold the first fold under the patient. The arms/hands closest to the patient do the unfolding, while the opposite arms/hands hold the lower part of the sheets in place.

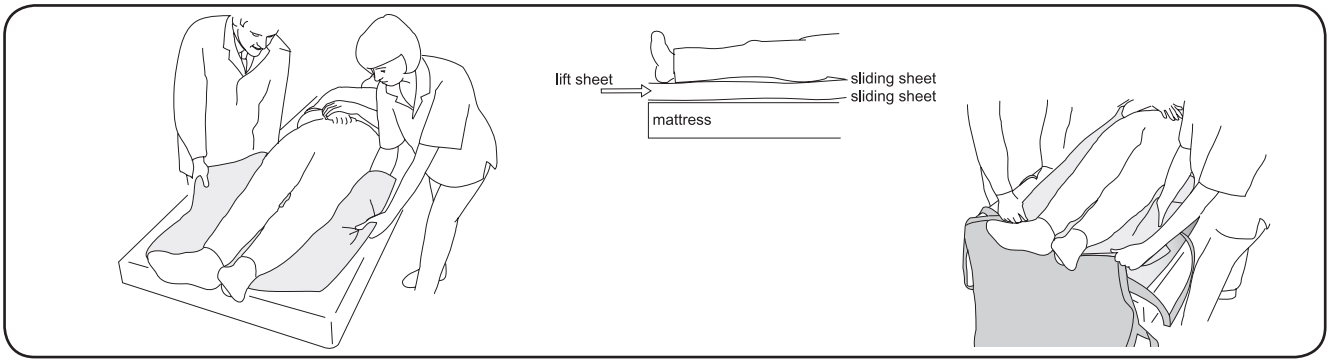

The caregivers then take a firm grip on the next fold and repeat the procedure until the sliding sheets are fully extended under the patient.

The lift sheet is then inserted between the sliding sheets from the foot end and pulled up between the friction-free sliding sheets.

The lift sheet is now in place under the patient. The upper edge should extend far enough that it reaches up under the head.

Now, the top sliding sheet can be removed. The easiest way is to do this from the head end downwards, by doubling the sliding sheet and letting it glide "under itself" as it is pulled downwards.

Application of lift straps

The lifts straps can be applied by turning the patient. For detailed instructions, see Application of lift sheet.

In some cases, if the patient cannot be turned, it may be more appropriate to carefully position the lift straps (which will lie under the buttocks and shoulders) under the curve of the back and then slide them carefully into place.

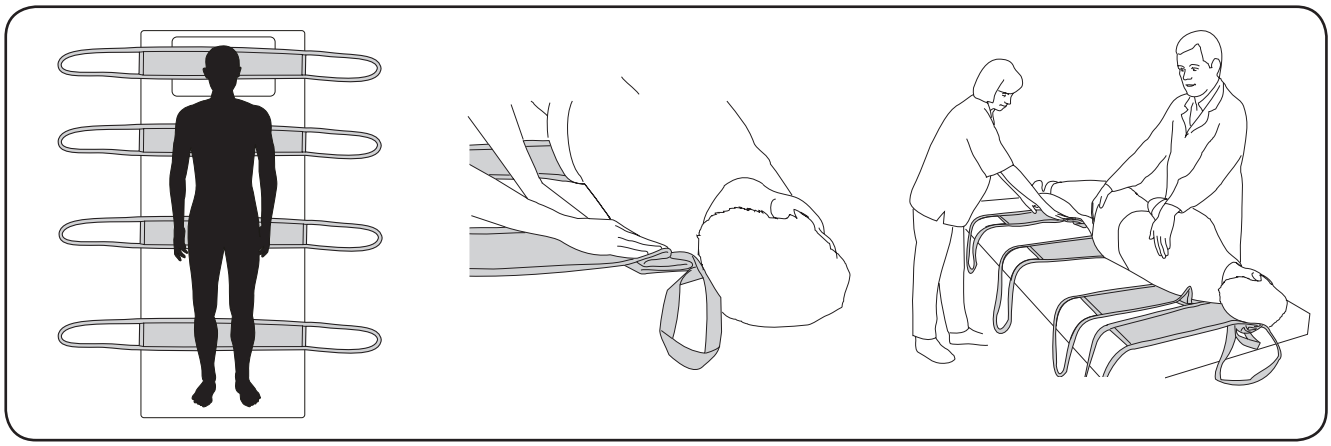

Lift straps are placed under the head, shoulders, back, buttocks and calves. The legs can be lifted either together or with two separate lift straps. The latter alternative is appropriate for hygiene care of the genital area.

The lift straps are removed either by turning the patient (see previous instructions) or by carefully pulling them out from under the patient.

Alternative application of lift straps

When positioning the straps under a patient who cannot be turned on one side, the straps must be guided in carefully under the patient, so as to avoid discomfort when he/she is lying on his/her back.

Positioning of the head and leg straps usually poses no problem. It is easiest to first guide the straps that are to lift under the buttocks and shoulders in under the patient's waist, where there is normally less pressure.

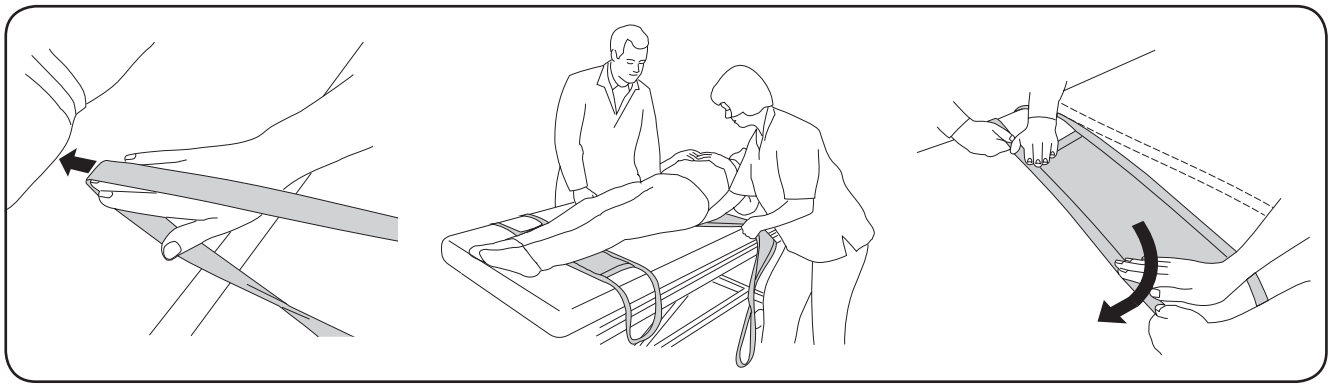

1. Guide the lift straps under the waist, as shown in the illustration. Press your hand downward and inward at an angle.

2. On the opposite side of the patient, your assistant meets your hand with his/hers and pulls the lift strap out from under the patient.

3. Together, you help each other to work the straps into position under the patient: downward under the buttocks and upward under the shoulders.
Pull alternately toward each side, outward and downward, while holding the strap taut.
Repeat the procedure until the lift strap is in place.

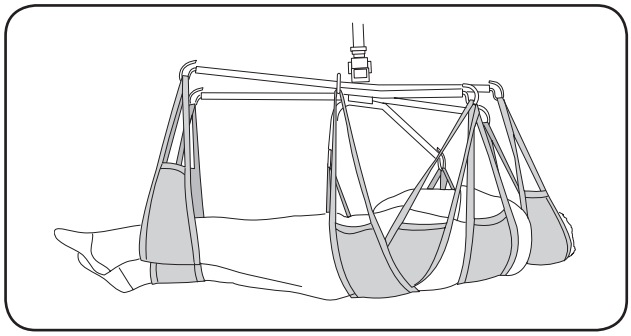

CrossStrap

The CrossStrap is an accessory that can be used instead of the seat strap.
It is placed slightly higher up against the curve of the back and is used in cases when you wish to avoid using straps under the buttocks.

The CrossStrap has a pocket for a plastic insert that provides extra stiffness.

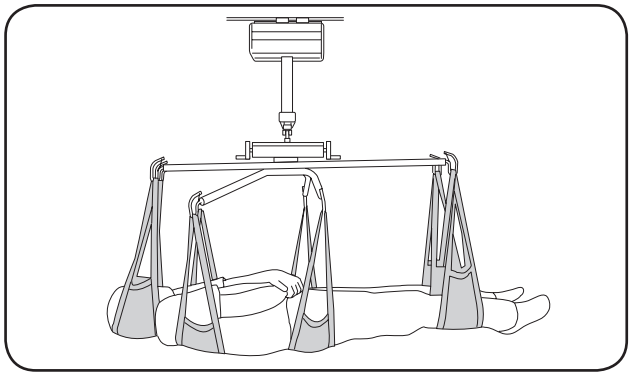

Lifting after application of sheet/straps

Guide OctoStretch over the patient and lower it to about half a metre above the bed.
Hang all the strap loops on the stretcher.
Note that OctoStretch has a head-end and a foot-end.

△Check to ensure that all strap loops are correctly fastened before the patient is lifted from the underlying surface.

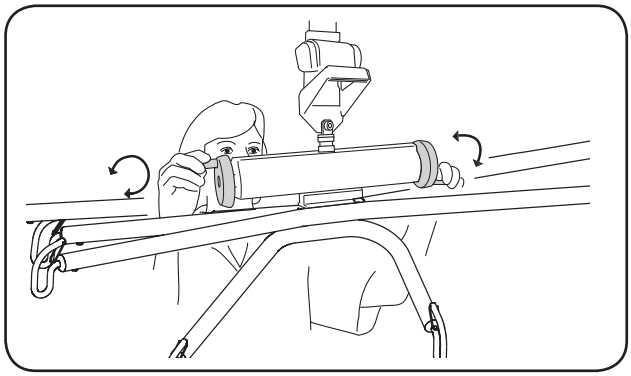

OctoStretch with Stretch Leveller

When lifting, ensure that the patient is suspended in the appropriate position: horizontally, or normally somewhat higher at the head end.
If neccessary, the lifting position can be adjusted by turning the knob on the Stretch Leveller.

© Copyright Liko AB 2009-07

Liko
A Hill-Rom Company

www.liko.com

Manufacturer:

Liko AB
SE-975 92 Luleå
Sweden
info@liko.se

National Distributor in USA and Canada:

Liko North America
122 Grove Street
Franklin, Ma 02038, USA
Phone: 508-553-3993, 1-888-545-6671
Fax: 508-528-6642
info@liko.com

Liko Distributor in UK:

Liko (UK) Ltd.
Liko House, L&M Business Park
Norman Road, Altrincham Cheshire
WA 14 4ES, UK
Phone: (0161)926 8067
Fax: (0161)929 7050
info@liko.co.uk

7 330925 712102